Barracuda

BCD-800-S/BCD-800-B

Stylish design and proven reliability makes the Barracuda a popular quality banner stand. The Barracuda is one of the most feature-rich single sided retractable banner stands available and has been specially designed for maximum convenience and ease of use.

arm table accessory addition

literature pocket accessory addition

snap on & off end caps

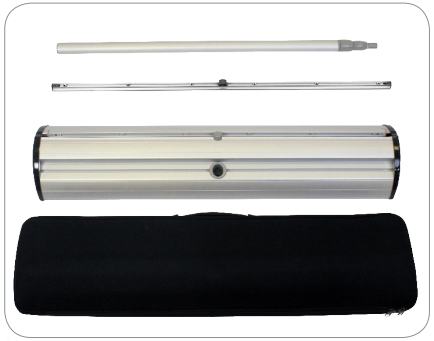

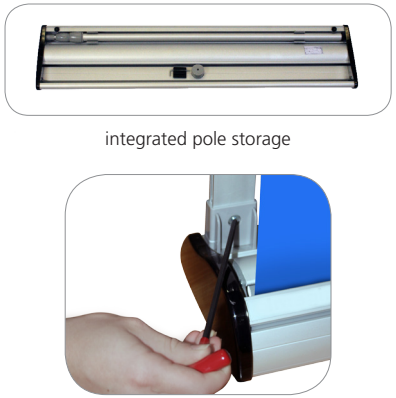

integrated pole storage

New Banner Stand Accessories:
easy connection with cam lock and channel

features and benefits:

- Variable height = 29.5" - 83.35"
- Telescopic pole with premium grip rail
- Integrated pole storage for the twist & lock telescopic pole
- Accessory channel featured on top of unit (to add a literature pocket or arm table accessory)
- Quick slide graphic to leader attachment
- Snap on and off end caps
- Premium form molded bag included
- Graphic tensioner
- Lifetime warranty against manufacturer defects

dimensions:

Hardware

Assembled unit:
86.61"(h) max x 34"(w) x 7.7"(d) approx.
2200mm(h) x 865mm(w) x 195mm(d) approx.

Base dimensions:
3.35"(h) x 34"(w) x 7.7"(d) approx.
85mm(h) x 865mm(w) x 195mm(d) approx.

Weight:
8.4 lbs / 3.83 kgs approx. (including carry bag)
(Installed graphic add weight)

Shipping

Shipping dimensions - ships in one box
36"(h) x 11"(w) x 5"(d)
905mm(h) x 260mm(w) x 105mm(d)

Approximate shipping weight:
12 lbs / 5.44 kgs shipping weight with graphic approx.

9 lbs / 3.83 kgs shipping weight without graphic approx.

Graphic

Visible dimensions:
83.35"max(h) x 31.50"(w)
2117mm(h) x 800mm(w)

29.5"min(h) x 31.50"(w)
750mm(h) x 800mm(w)

Grippa top rail attachment recommended for semi-permanent or long term use. Adhesive top rail attachment recommended for short term use.

WARNING: Always attach graphic to base and top rail before removing the locking pin. After fitting, the graphic should be left for 24 hours before use to ensure the adhesive bonds sufficiently. Opening the base will invalidate the product warranty.

Graphic tension may be re-applied or added by removing the end cap, then turn the ratchet tensioner clockwise.

additional information:

Graphic materials:
14oz. anti-curl vinyl, 8oz. oxford,
11 mil melinex

Stand-off rectangle counter top is available in black thermoform only.

Stand-off literature rack is available (L112-2 only)

Lumina 2 banner lighting option available

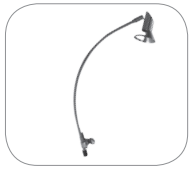

We are continually improving and modifying our product range and reserve the right to vary the specifications without prior notice. All dimensions and weights quoted are approximate and we accept no responsibility for variance. E&OE. See Graphic Templates for graphic bleed specifications.

Set-up

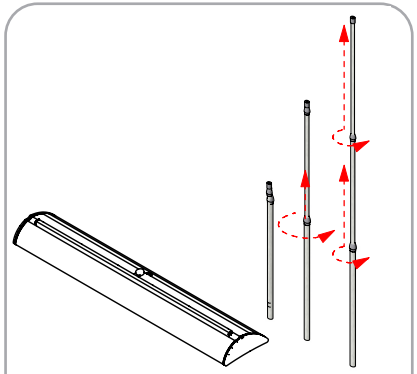

Twist telescopic pole to extend 1

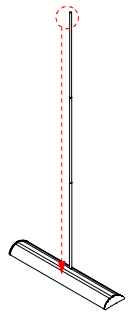

Secure pole(s) in the base of stand then add doubler 2

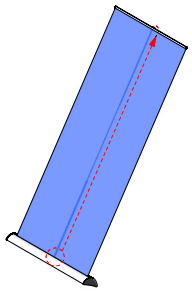

Gently lean the unit back and pull the graphic up by the toprail 3

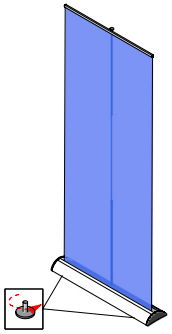

Leveling feet located under unit 4

Graphic to top rail attachment (metal insert)

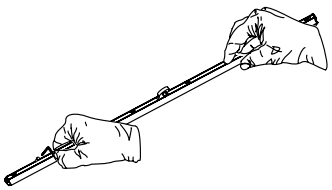

Loosen each screw from the rail using provided allen key and remove metal insert (do not remove screws) 1

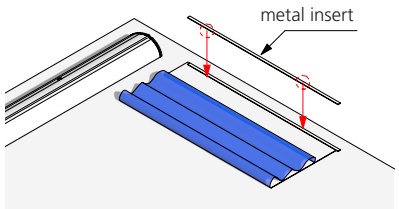

Peel film to expose adhesive; place metal insert from graphic rail on top back side of the graphic point 2

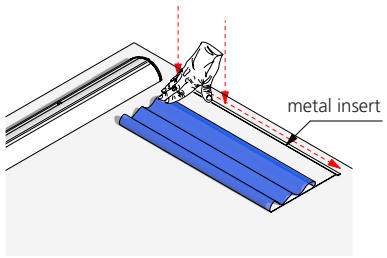

Press down on the metal insert to make sure adhesive is secure on graphic 3

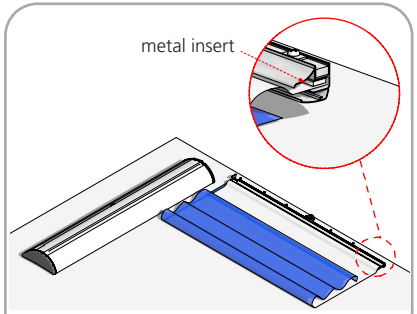

Insert the metal insert with graphic attached into the top graphic profile rail 4

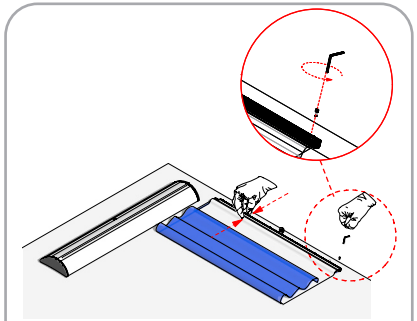

Tighten the screws back in place to hold metal insert and graphic with an allen key 5

Quick slide top rail attachment (plastic insert)

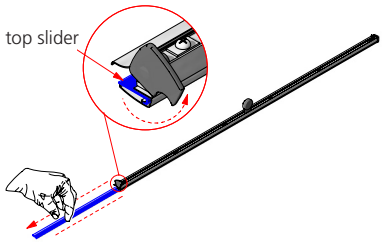

Remove top slider from graphic rail 1

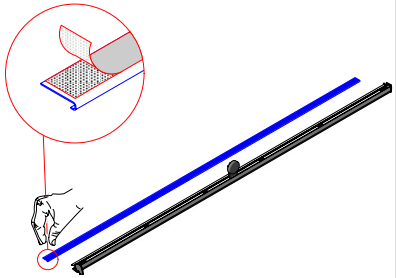

Remove film to expose adhesive on top slider 2

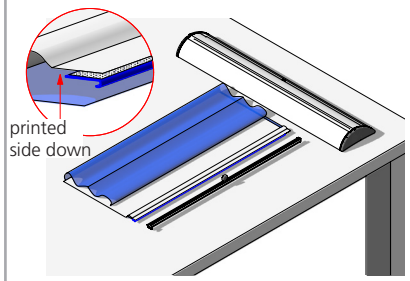

Align and apply to top slider on the top front of graphic 3

Quick slide base attachment

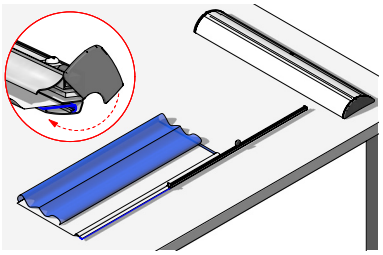

Insert graphic onto graphic rail 4

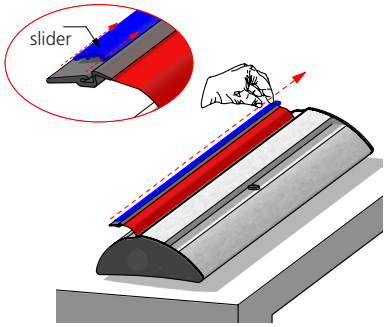

Slide the quick slider off the leader 1

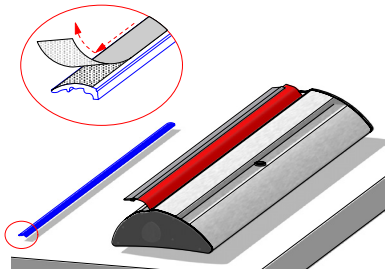

Peel film to expose adhesive tape on quick slider 2

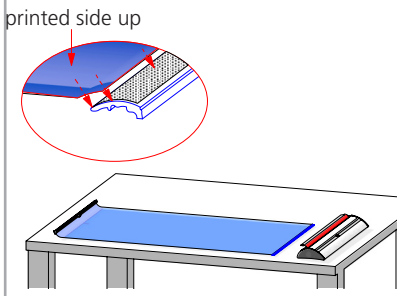

Align and apply to back of graphic 3

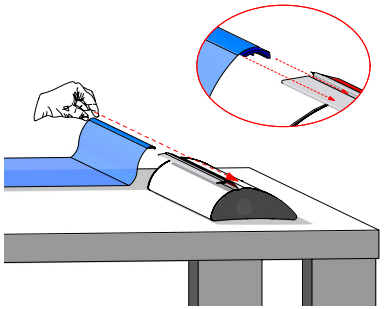

Insert slider with graphic applied into quick slider, then center 4

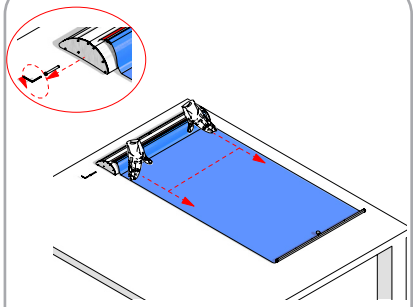

Remove pin while holding onto the graphic so the graphic does not retract in quickly 5

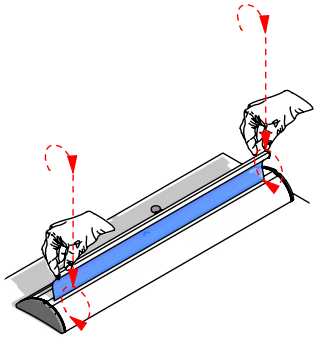

Slowly retract the graphic back into the base 6

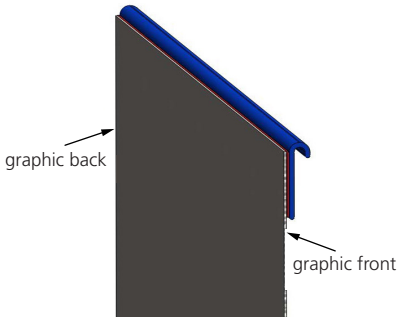

top rail slider

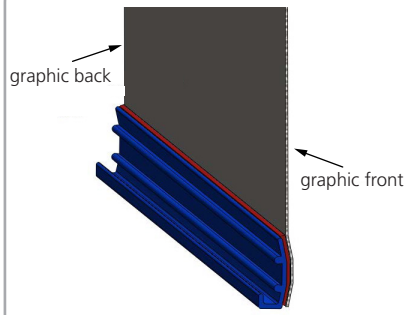

bottom slider

Check out these related products:

Orient

Orient 2

Imagine

Advance

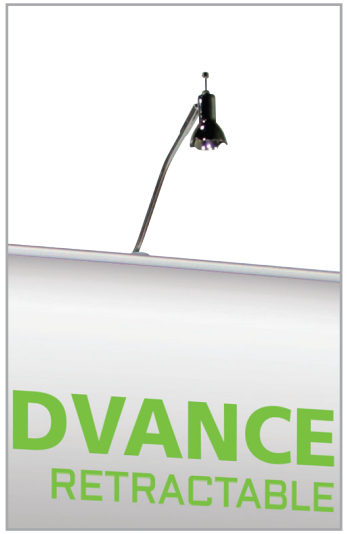

Lumina 2

Excalibur